User Manual

Digital Inspection System

Model:

Features:

- View live inspection video instantly on the 3.5 in.(88.9mm) QVGA color LCD screen
- Up to 3 Mega Pixels resolution for image capture, 720P high definition for recording videos
- 4x zoom and 360° image flip monitor
- 8.2mm diameter camera with high sensitivity for low-light VGA camera chip in the tip
- Wired Color Monitor can be detached from the unit for remote viewing . Can be operated up to 1.5m away with a cable.
- 1W Cree flash assisting dark area work
- Adjustable handle and screen

Product Overview | Applications | Safety & Care | Instructions for use | Specifications

Product Overview:

This new Digital Video Recording Endoscope is a portable, hand-held, multifunctional inspection system featuring a 3.5” full color LCD screen with powerful recording capability, Users can capture images (JPG) or videos (AVI) on the TF card with up to 3 megapixels resolution for the images, 720P high definition for the videos (Through High Quality Linear Interpolation). TheWired Color Monitor can be detached from the unit for remote viewing and operating up to 1.5m away using a cable. With ergonomic and robust design, users can control all the keys with one hand easily,and the adjustable handle offers extra comfort.. In addition, the stainless steel shield and overall reinforced structures ensures stability under heavy duty.

The device has a slim 8.2mm diameter probe with 6 adjustable LED lights, high performance camera module offering crystal clear output. Furthermore, it has an integrated 1W CREE flash light for dark area working assistance.

Applications:

This premier tool is an economical solution for:

- Automotive / Diesel Repair and Maintenance
- Inspection of hard-to-reach or hard-to-see area or equipment
- Plumbing, construction, restoration applications
- Science Education
- Outdoor Exploration

WARNING! Please read all safety warnings and all instructions before using this product. Failure to follow the warnings and instructions may result in electric shock, fire and serious injury.

Safety:

- Keep the tool dry, clean, free from oil, water, gas or other materials causing corrosion.
- Keep work area clean and well lit.
- This appliance is not intended for use by persons with limited physical, sensory or mental capabilities.
- This appliance is not intended for medical use or personal inspection.
- Keep bystanders, children away while operating the tool.
- Do not overreach, keep proper footing and balance at all times.

Batteries:

- Use only Alkaline or Ni-MH AA batteries.
- Replace batteries when the LED indicator turns red.
- Remove the batteries when the product is not in use.

Maintenance:

- Always keep the camera lens clean.
- Should any other components not mentioned need to be replaced, please contact our service agents.

Instructions for use

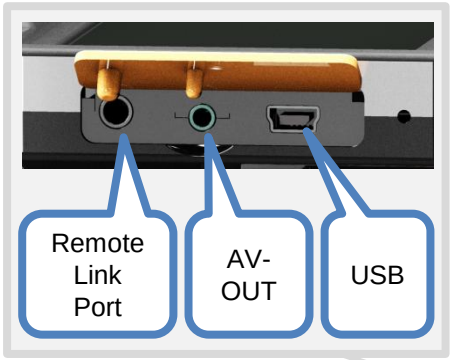

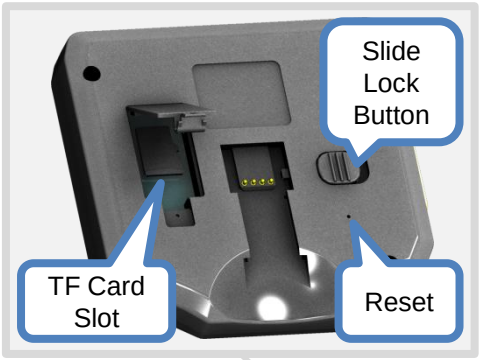

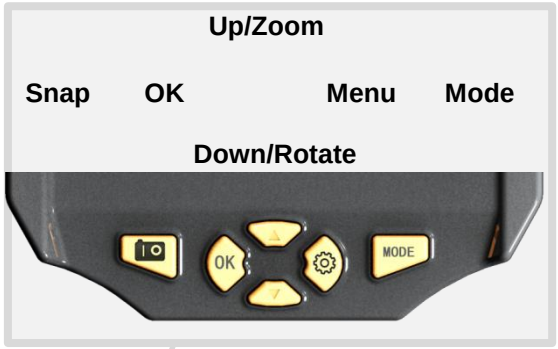

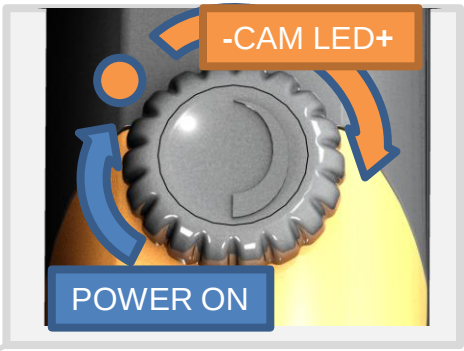

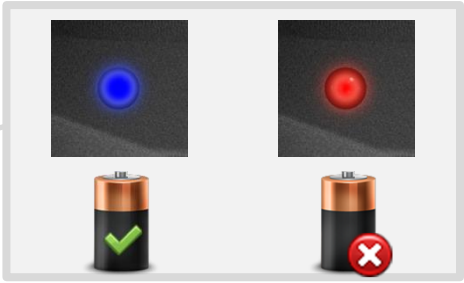

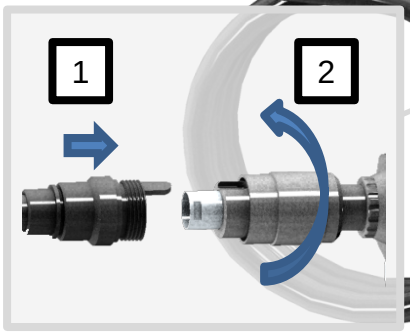

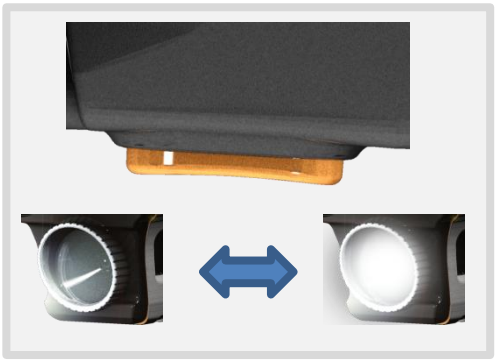

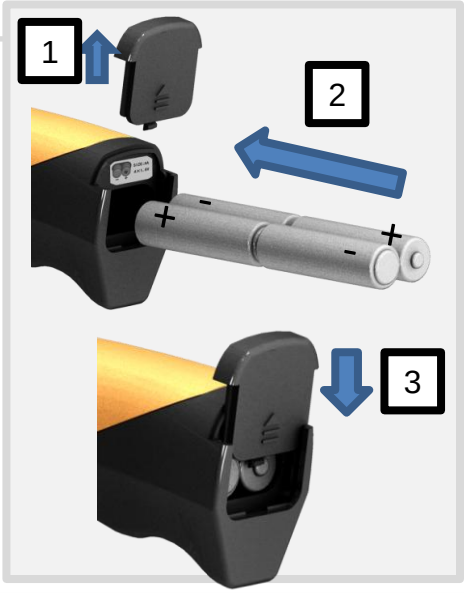

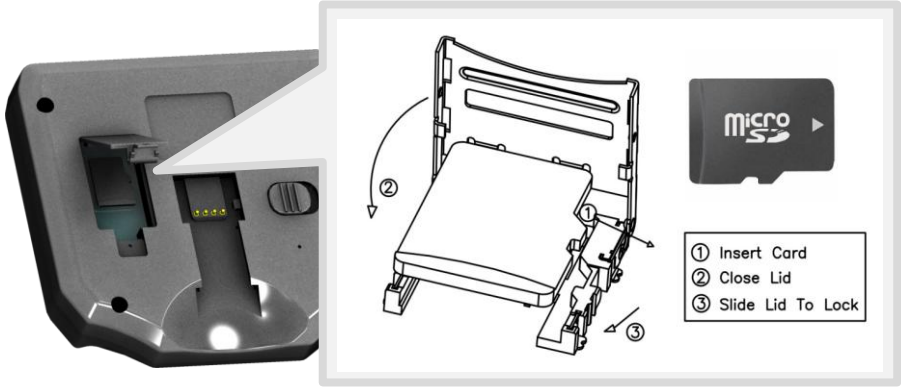

Insert card : Power off the device, open the cover on the backside of the monitor and insert the TF card according to this chart.

⚠ Please make sure the device is powered off before operating the TF card.

⚠ Please operate gently.

Click in Photo/Video mode to snap photos or record movie clips.

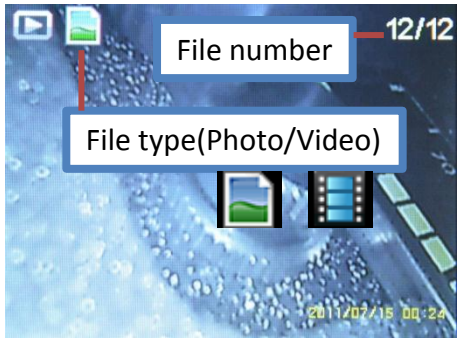

Click **"MODE"** button to switch the mode Photo Video Playback

Click to enter Photo settings in Photo Mode or Video settings in Video Mode,click "**MODE**" button to enter General Settings

Click "**UP**" "**DOWN**" button to select and **"OK"** button to save changes.

Menu Tree

Click ⚙ to enter the menu to change settings. Default setting: ●

Photo

- Resolution
  - 3M(2048×1536)
  - 2M(1600×1200)
  - ●VGA(640×480)
- Effect
  - ●Normal
  - Black&White
- Date Stamp
  - ●On
  - Off

Video

- MovieSize
  - 1280×720
  - ●640×480
  - 320×240
- Effect
  - ●Normal
  - Black&White
- Date Stamp
  - ●On
  - Off

Playback

- Lock
  - One/All
  - Unlock
- Delete
  - Single File
  - All File
- Thumbnail
  - Display 4
  - Display 9

General Settings

Click ⚙ and then **MODE** button to enter General Settings.

- Time&Date
  - YY/MM/DD
  - Hour/Minute
  - Display Style
- Languages
  - ●English
  - Germany
  - Chinese
  - Spanish
  - Franch
  - Russian
  - Japanese
- TV OUT
  - NTSC
  - ●PAL
- Sound
  - Shutter
  - Power on
- Power Frequency
  - ●50hz
  - 60hz
- Power Save
  - ●3 minutes
  - 5 minutes
  - 10 minutes
  - Off
- Format Card
  - Yes
  - No
- Reset settings
  - Yes
  - No

Wired Remote Link Mode

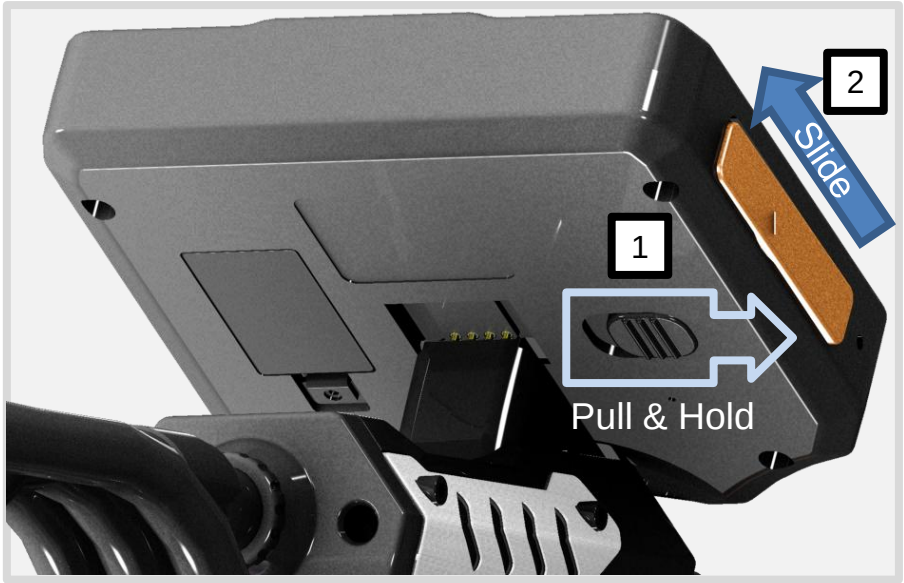

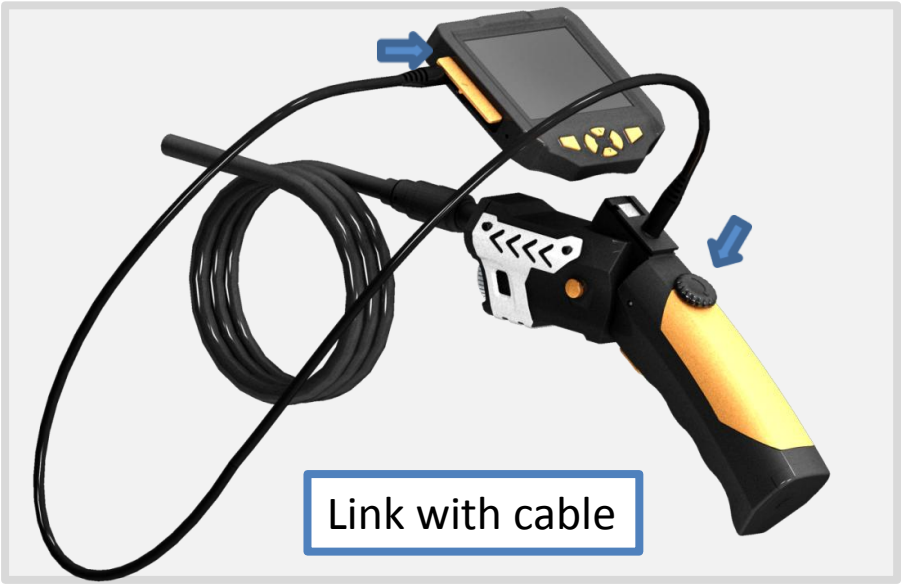

TECHNICAL SPECIFICATIONS

Monitor:
Screen Type: 3.5 in. (88.9mm) Color LCD
Resolution: 320*240 pixels (QVGA)
Rotation: 360° rotation
Video Recording Resolution:320*240, 640*480, 1280*720(Pixels)
Image Capturing Resolution:640*480,1600*1200,2048*1536(Pixels)
Menu languages:
English,Germany,Chinese,Spanish,Franch,Russian,Japanese
Port: Remote connect port; AV-out, USB, TF card slot

Camera:
Diameter：8.2mm
Shaft Diameter：7.6mm
Shaft Length: 100cm
Resolution：300K pixels VGA
Viewing angle: 60°
Depth of Field： 80mm—infinity
Light Source: 6 adjustable high-intensity LEDs

Other:
LED Flash light: 1W CREE LED
Operating Temperature: 32° to 113° F (0° to 45° C)
Power Source: 4*AA battery
Max battery life: 4--5hours
Weight: 445g
Certifications: CE FCC RoHS

Contents:
Digital Endoscope
User's Manual
Probe (Ø8.2mm)
Accessories – pick up hock and magnet
Remote connect cable
Video-out cable
Custom Hard Case

Packaging Information
H: 361mm
W: 400mm
D:130mm

EU Environmental Protection
Waste electrical products should not be disposed of With household waste. Please recycle where facilities Exist. Check with your local authority or retailer for Recycling advices.